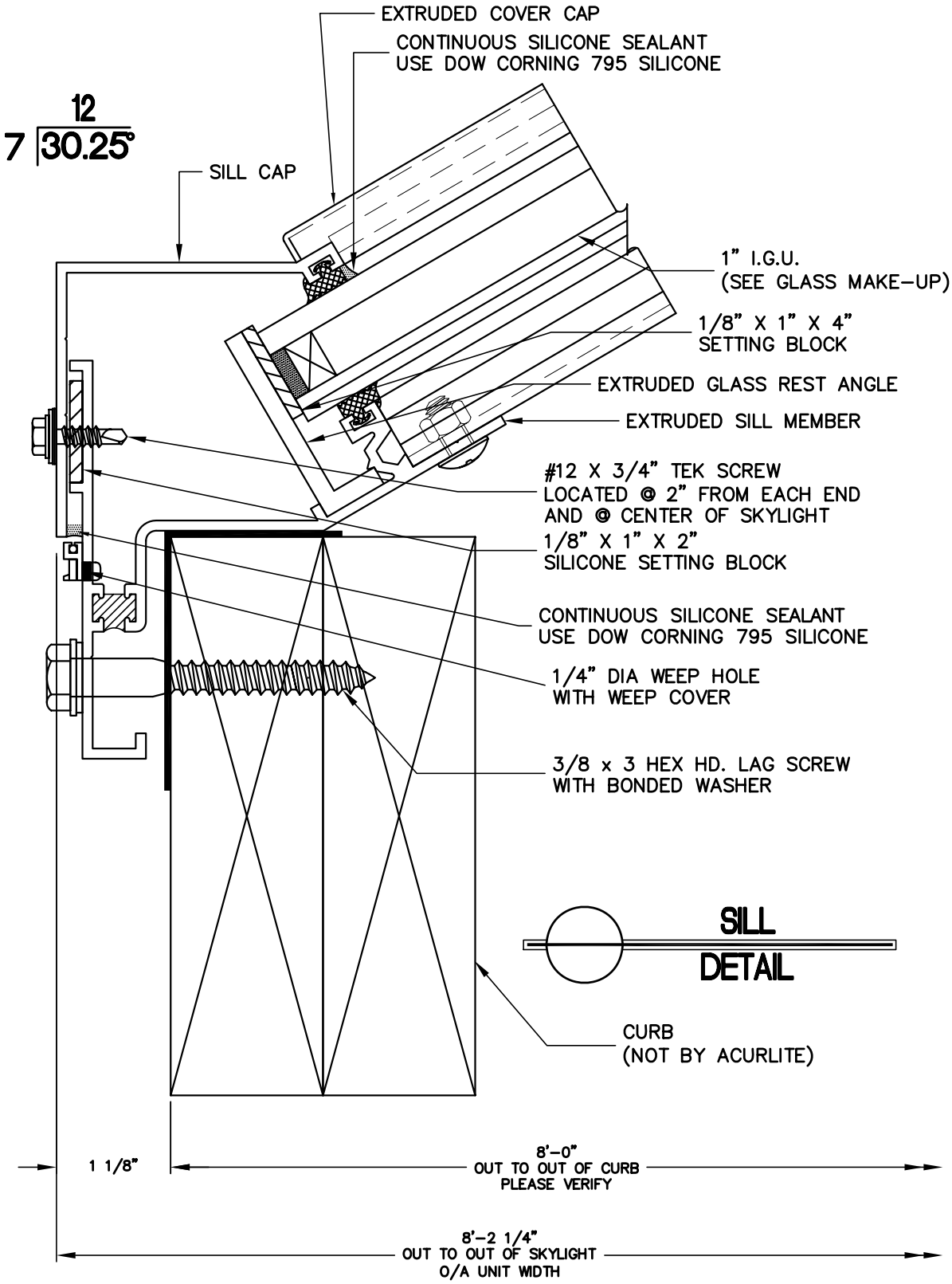
12
7 30.25°
EXTRUDED COVER CAP
CONTINUOUS SILICONE SEALANT
USE DOW CORNING 795 SILICONE
SILL CAP
1" I.G.U.
(SEE GLASS MAKE-UP)
1/8" X 1" X 4"
SETTING BLOCK
EXTRUDED GLASS REST ANGLE
EXTRUDED SILL MEMBER
#12 X 3/4" TEK SCREW
LOCATED @ 2" FROM EACH END
AND @ CENTER OF SKYLIGHT
1/8" X 1" X 2"
SILICONE SETTING BLOCK
CONTINUOUS SILICONE SEALANT
USE DOW CORNING 795 SILICONE
1/4" DIA WEEP HOLE
WITH WEEP COVER
3/8 x 3 HEX HD. LAG SCREW
WITH BONDED WASHER
SILL
DETAIL
CURB
(NOT BY ACURLITE)
1 1/8"
8'-0"
OUT TO OUT OF CURB
PLEASE VERIFY
8'-2 1/4"
OUT TO OUT OF SKYLIGHT
O/A UNIT WIDTH